LONG SEAMS

COURSE	ORIENTATION	ORIENTATION
1(TOP)	75°	255°
2	81°	261°

*VERT – TOP TO BOTTOM

Ship loose items: 1
(4) SHIM PLATES

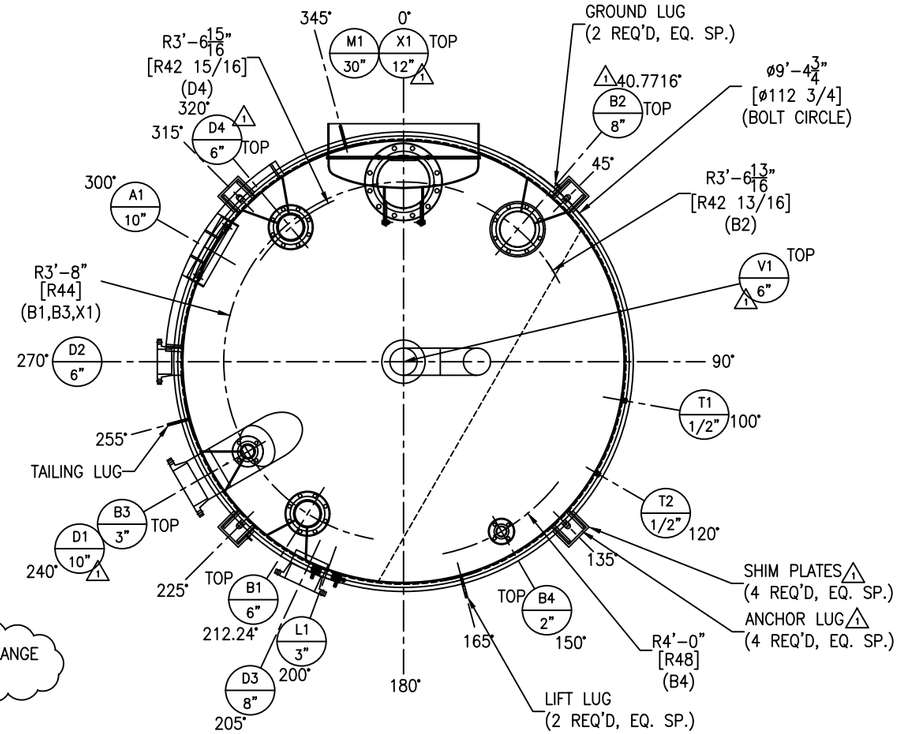

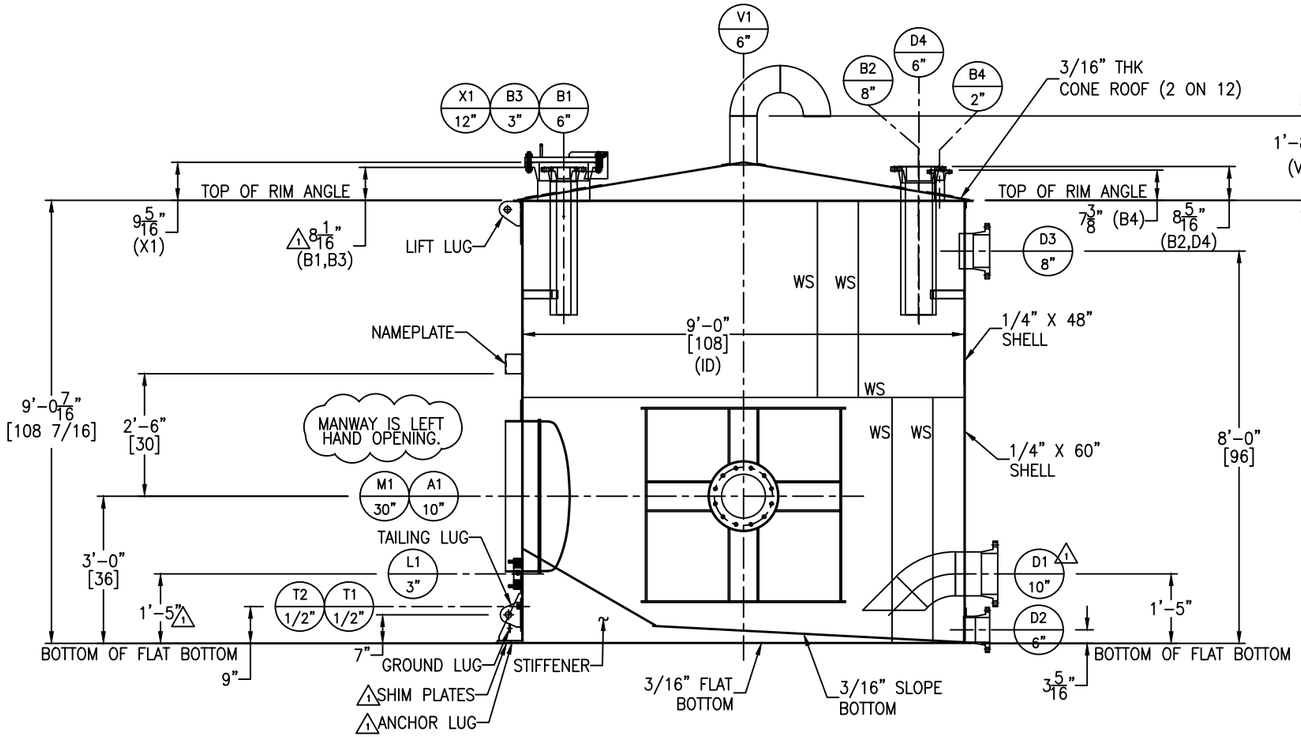

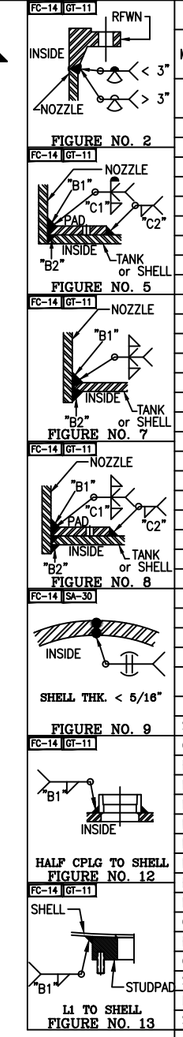

NOZZLE SCHEDULE

MARK	SERVICE	SIZE	RATING	TYPE / STYLE	NECK SCHED.	PROJECTION EXT. (E)	PROJECTION INT. (MIN.)	WELD FIGURE	REPAD SIZE (WIDTH X THK.)	WELD SIZE "A1"	"A2"	"B1"	"B2"	"C1"	"C2"
A1	AGITATOR (BY OTHERS)	10"	–	PAD FLANGE W/ WALL RING(BY OTHERS)	–	SEE DWG	SEE DWG	SEE DWG	–	SEE DETAIL FOR WELD SIZES					
B1	PROCESS INLET	6"	150#	RFWN	40S	SEE DWG	SEE DWG	2,8	2" X 3/16"	–	–	1/4	1/4	3/16	3/16
B2	PROCESS INLET	8"	150#	RFWN	40S	SEE DWG	SEE DWG	2,8	2" X 3/16"	–	–	1/4	1/4	3/16	3/16
B3	PROCESS INLET	3"	150#	RFWN	40S	SEE DWG	SEE DWG	2,8	2" X 3/16"	–	–	1/4	1/8	3/16	3/16
B4	WATER SPRAY	2"	150#	RFWN	40S	SEE DWG	1"	2,8	2" X 3/16"	–	–	1/4	1/8	3/16	3/16
D1	PROCESS OUTLET	10"	150#	RFWN	40S	1 8"	SEE DWG	2,7	–	–	–	1/4	1/4	–	–
D2	DRAIN	6"	150#	RFWN	40S	6"	–	2,5	2" X 1/4" SEE DWG	–	–	1/4	1/8	1/4	1/4
D3	OVERFLOW	8"	150#	RFWN	40S	6"	1"	2,7	–	–	–	1/4	1/4	–	–
D4	PROCESS INLET	6"	150#	RFWN	40S	SEE DWG	SEE DWG	2,8	2" X 3/16"	–	–	1/4	1/4	3/16	3/16
L1	LEVEL	3"	–	SP. STUDPAD	–	–	–	13	–	–	–	1/4	1/4	–	–
M1	MANWAY	30"	–	CM-2	1/4"	4"	SEE DWG	8	5" X 1/4"	–	–	1/4	1/4	1/4	1/4
V1	VENT	6"	–	PIPE W/ ELBOWS	40S	SEE DWG	–	5	2" X 3/16"	–	–	1/4	1/8	3/16	3/16
X1	INSPECTION HATCH	12"	150#	RFWN W/ BLIND	40S	SEE DWG	1"	2,8	3" X 3/16"	–	–	1/4	1/8	3/16	3/16
T1	TEST COUPLING	1/2"	3000#	HALF THRD CPLG W/ PLUG	–	–	–	12	–	–	–	1/4	1/8	–	–
T2	TEST COUPLING	1/2"	3000#	HALF THRD CPLG W/ PLUG	–	–	–	12	–	–	–	1/4	1/8	–	–

MATERIALS OF CONSTRUCTION

	VESSEL
SHELL	SA240-304/304L
CONE TOP/FLAT&SLOPE BTM	SA240-304/304L
RIM ANGLE	SA479-304/304L
NOZZLE NECKS	SA312-304/304L WLD & SA403-304/304L WPB
NOZZLE FLANGES	SA182F-304/304L
MANWAY NECKS	SS304
MANWAY FLANGES	SS304
MANWAY GASKETS	BUNA-N
BOLTS/STUDS (NOZZLE)	SA193-B8 (TEFLON COATED)
NUTS (NOZZLE)	SA194-8 (TEFLON COATED)
GASKET (NOZZLE)	GARLOCK 3000
REPADS	SA240-304/304L
COUPLINGS/PLUGS	SA182F-304/304L
SUPPORTS/HOLD DOWNS	SA240-304/304L
LIFTING/TAILING LUGS	SA240-304/304L
STUDPAD	SA240-304/304L OR SA182F-304/304L
GROUND LUG	SA240-304/304L
BOTTOM STIFFENER	SA240-304/304L
AGITATOR ASSEMBLY	SS304
SHIM PLATES 1	SA240-304/304L
HANDRAIL	–
HANDRAIL CLIPS	–
PLATFORM	–
PLATFORM CLIPS	–
DIPTUBE SUPPORT	–
JACKET SHELL	–
JACKET HEADS	–
JACKET NOZZLE NECKS	–
JACKET NOZZLE FLANGES	–

DESIGN DATA

	VESSEL
DESIGN AND FAB. CODE	API650
CERT. STAMP REQ'D.	NO
DESIGN PRESSURE	ATM
DESIGN TEMPERATURE	194° F
MIN. DESIGN METAL TEMP.	-20° F @ ATM
OPERATING PRESSURE	ATM
OPERATING TEMPERATURE	115° F
JOINT EFFICIENCY HEADS	0.70
JOINT EFFICIENCY SHELL	0.70
CORROSION ALLOWANCE	0"
SPECIFIC GRAVITY	1.0
EARTHQUAKE ZONE	Ss = (0.526) S1 = (0.23)
WIND LOAD	99 MPH
STRESS RELIEF	NOT REQ'D
RADIOGRAPHIC EXAM	NOT REQ'D
DYE PENETRANT EXAM	NOT REQ'D
MAGNETIC PARTICLE EXAM	NOT REQ'D
HYDROSTATIC TEST	NOT REQ'D
PNEUMATIC TEST	2 PSIG / GAUGE #1
JKT DESIGN AND FAB. CODE	–
JKT CERT. STAMP REQ'D.	–
JKT DESIGN PRESSURE	–
JKT DESIGN TEMPERATURE	–
JKT MIN. DESIGN METAL TEMP.	–
JKT OPERATING PRESSURE	–
JKT OPERATING TEMPERATURE	–
JKT JOINT EFFICIENCY HEADS	–
JKT JOINT EFFICIENCY SHELL	–
JKT HYDRO TEST	–

VESSEL FINISH

INTERIOR WELD TREATMENT:	SAV TANK STANDARD
EXTERIOR WELD TREATMENT:	SAV TANK STANDARD
SAV TANK FINISHING STANDARD:	SEE NOTE 6
INSULATION:	N/A
PAINTING:	N/A

VESSEL CAPACITY AND WEIGHTS

OPERATING CAPACITY	3,010 GAL.
FULL CAPACITY	4,300 GAL.
EMPTY SHIPPING WEIGHT	7,300 LBS.
WEIGHT FULL OF WATER	43,300 LBS.
WEIGHT FULL OF PRODUCT	43,300 LBS.

QUALITY CONTROL

ENG. _____ DATE: _____

Q.C. _____ DATE: _____

This drawing is issued for customer approval. please review, make approval changes (if any) in red. check the appropriate box, sign & date.

- ☐ Approval – no changes. Please proceed with fabrication.
- ☐ Approved as noted. Please proceed with fabrication
- ☐ Not approved. Please make changes and resubmit.

Customer signature _____ Date _____

GENERAL NOTES

1.) COVER ALL FLANGES, OPENINGS & MACHINED SURFACES PRIOR TO SHIPMENT UNLESS OTHERWISE NOTED.
2.) BOLT HOLES TO STRADDLE 0° & 180° UNLESS OTHERWISE NOTED.
3.) NOZZLE REPADS TO HAVE (1) ø1/4" TELL-TALE HOLES ON HORIZONTAL CENTER LINE. ALL OTHER REPADS TO HAVE (1) ø1/4" WEEP HOLE AT LOWEST POINT ON PAD.
4.) MANUFACTURING TOLERANCE TO BE IN ACCORDANCE WITH API STANDARD 650 7.5.
5.) ASME MATERIALS TO CONFORM TO THE FOLLOWING: FLANGES – B16.5, FITTINGS – B16.9 & COUPLINGS – B16.11.
6.) PICKLE ALL EXTERIOR WELDS. PASSIVATE INTERIOR & EXTERIOR OF VESSEL.

REVISIONS

REV	D.BY	C.BY	DATE	DESCRIPTION
2				AS BUILT
1	RS	NP	6/2/25	CERTIFIED
0	AD	RS	3/27/25	APPROVAL

Savannah Tank & Equipment Corp.
1517 Telfair Road, Savannah, GA 31415
(912) 233-8902

DRAWN BY: AD
CHK'D BY: RS
APPROVED BY: NP
SCALE: 1/2" = 1'-0"

KIMBERLY CLARK
SECONDARY REFINER FEED TANK
EQUIP. #230-TK-23001
CUST. PO #C000139275

DRAWING NO.: 011-25-1 SHT 1 OF 6 REV. SET 1

FC-14

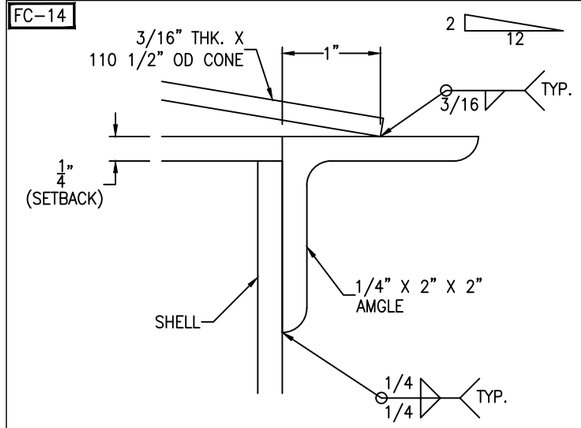

RIM ANGLE DETAIL

SCALE: 1'-0" = 1'-0"

FC-14

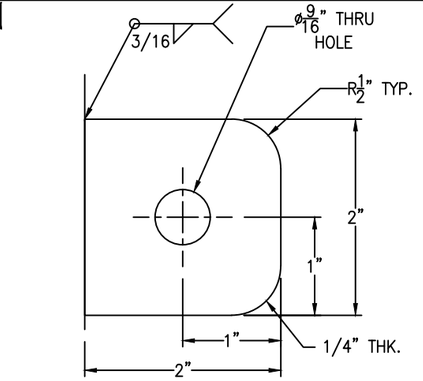

GROUND LUGS ARE LOCATED @ 45° AND 225°

GROUND LUG DETAIL

(2 REQ'D) SCALE: 1'-0" = 1'-0"

FC-14

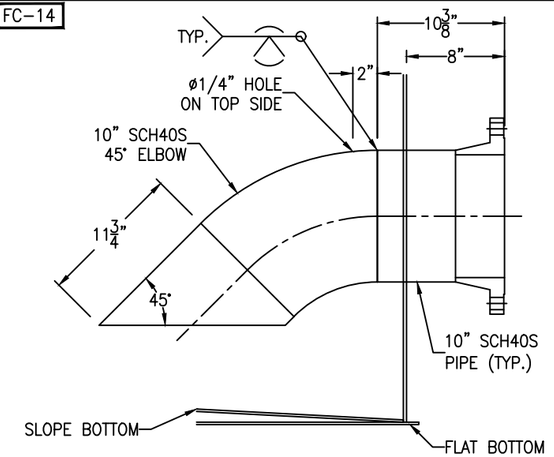

⚠1 NOZZLE D1 DETAIL

SCALE: 1 1/2" = 1'-0"

FC-14

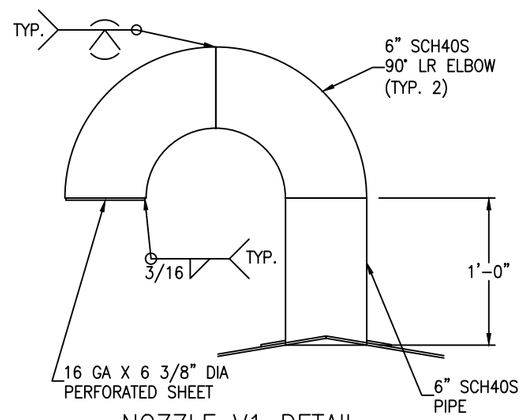

NOZZLE V1 DETAIL

SCALE: 1 1/2" = 1'-0"

FC-14

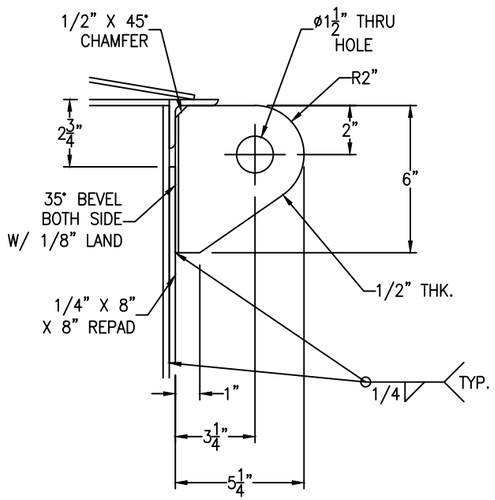

TANK WT. <= 10000#
SHACKLE PIN DIA. = 1 3/8"

LIFT LUG DETAIL

(2 REQ'D) SCALE: 3" = 1'-0"

FC-14

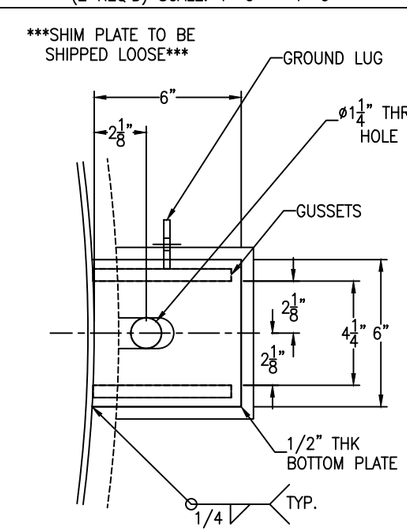

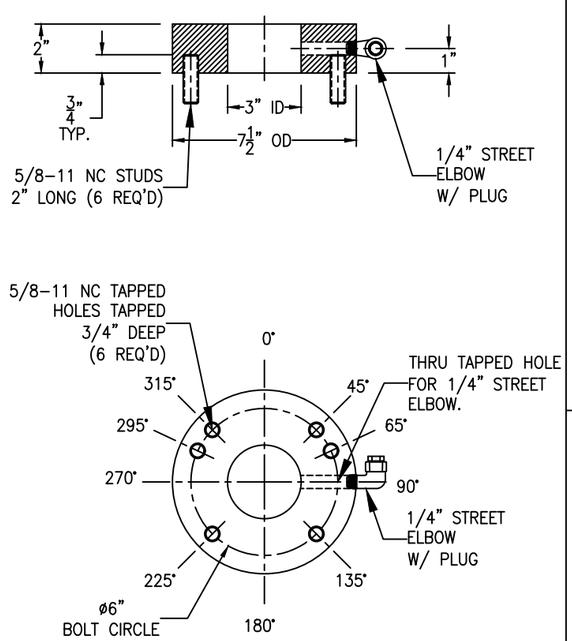

SPECIAL STUDPAD DETAIL

(1 REQ'D) SCALE: 3" = 1'-0"

FC-14

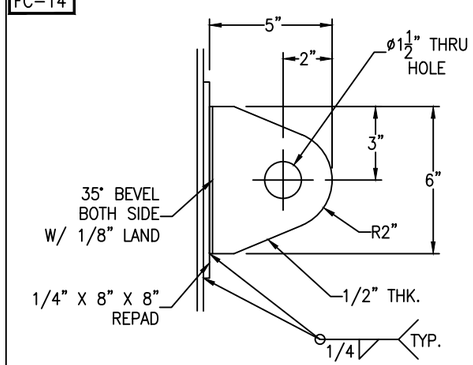

TANK WT. <= 10000#
SHACKLE PIN DIA. = 1 3/8"

TAILING LUG DETAIL

SCALE: 3" = 1'-0"

FC-14

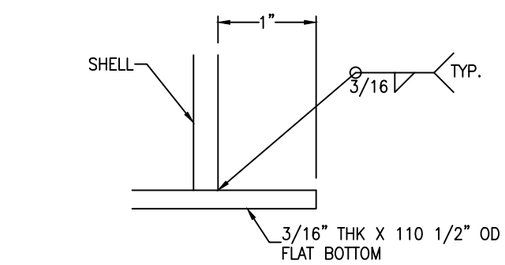

FLAT BOTTOM DETAIL

SCALE: 1'-0" = 1'-0"

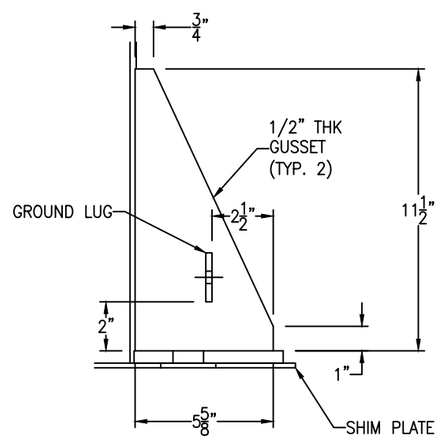

⚠1 ANCHOR LUG DETAIL

(4 REQ'D) SCALE: 3" = 1'-0"

***SHIM PLATE TO BE
SHIPPED LOOSE***

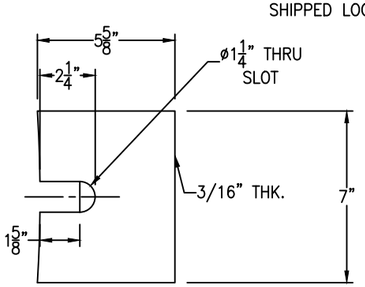

⚠1 SHIM PLATE DETAIL

(4 REQ'D) SCALE: 3" = 1'-0"

REV	D.BY	C.BY	DATE	DESCRIPTION
2				AS BUILT
1	RS	NP	6/2/25	CERTIFIED
0	AD	RS	3/27/25	APPROVAL

⚠1 REVISIONS

Savannah Tank & Equipment Corp.
1517 Telfair Road, Savannah, GA 31415
(912) 233-8902

DRAWN BY: AD
CHK'D BY: RS
APPROVED BY: NP
SCALE: 1/2" = 1'-0"

KIMBERLY CLARK
SECONDARY REFINER FEED TANK
EQUIP. #230-TK-23001
CUST. PO #C000139275

DRAWING NO.: 011-25-2 SHT 2 OF 6 REV. SET 1

FC-14

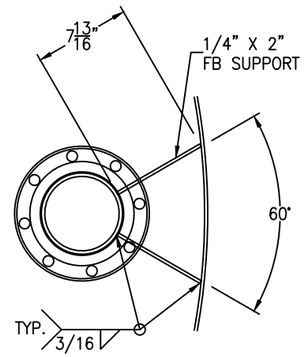

NOZZLE B1 SUPPORT DETAIL

SCALE: 1 1/2" = 1'-0"

FC-14

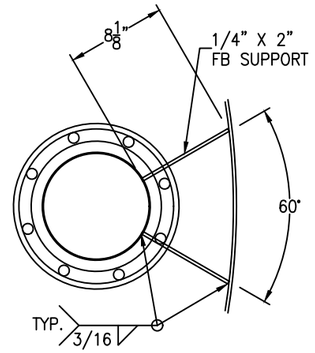

NOZZLE B2 SUPPORT DETAIL

SCALE: 1 1/2" = 1'-0"

FC-14

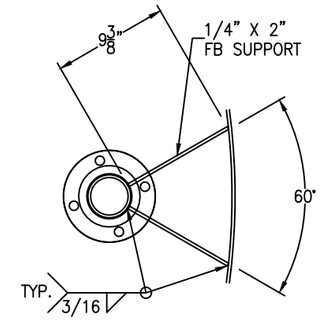

NOZZLE B3 SUPPORT DETAIL

SCALE: 1 1/2" = 1'-0"

FC-14

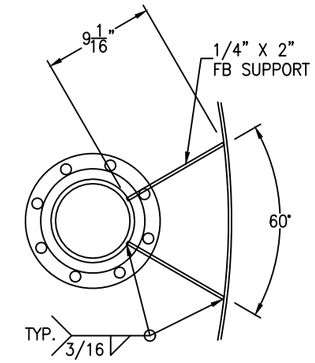

△1 NOZZLE D4 SUPPORT DETAIL

SCALE: 1 1/2" = 1'-0"

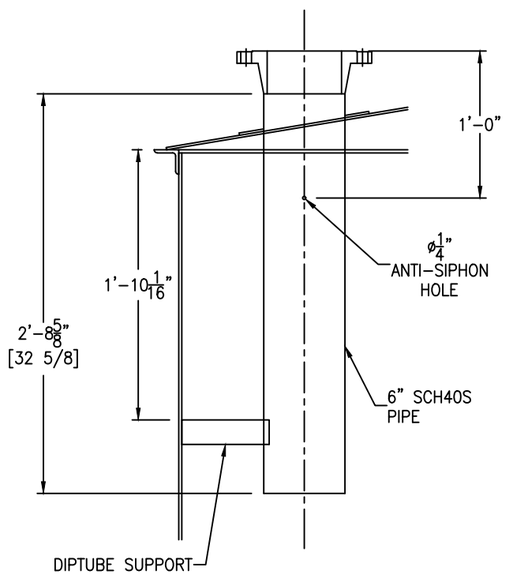

NOZZLE B1 DETAIL

SCALE: 1 1/2" = 1'-0"

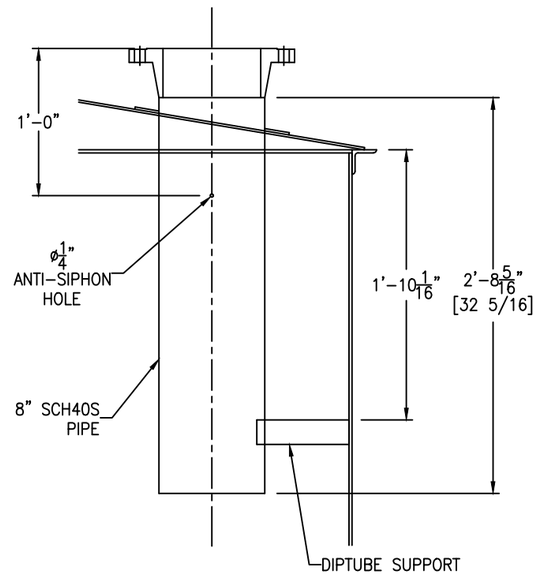

NOZZLE B2 DETAIL

SCALE: 1 1/2" = 1'-0"

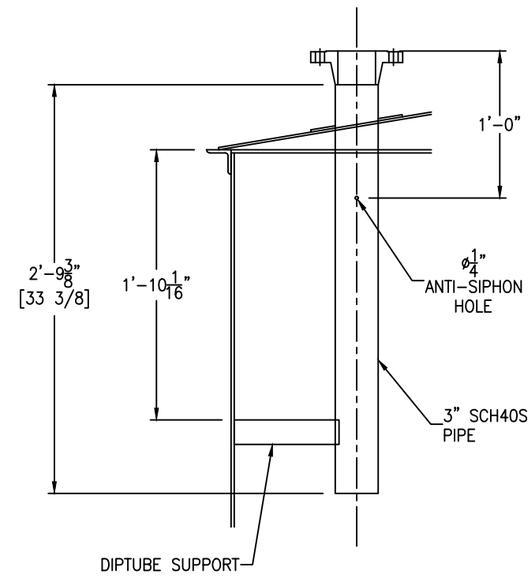

NOZZLE B3 DETAIL

SCALE: 1 1/2" = 1'-0"

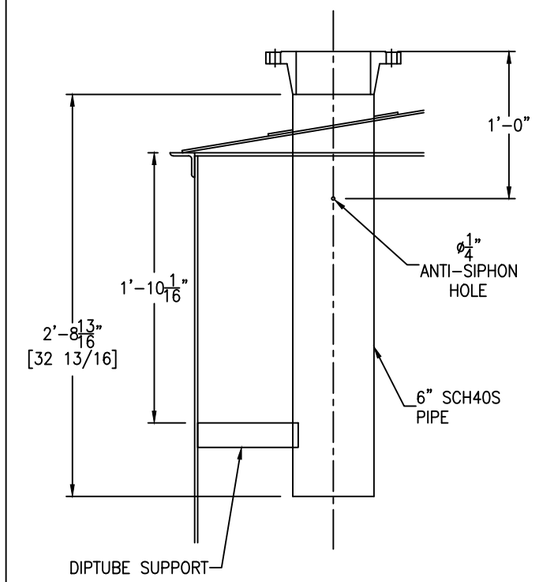

△1 NOZZLE D4 DETAIL

SCALE: 1 1/2" = 1'-0"

*NOTCH PIPE

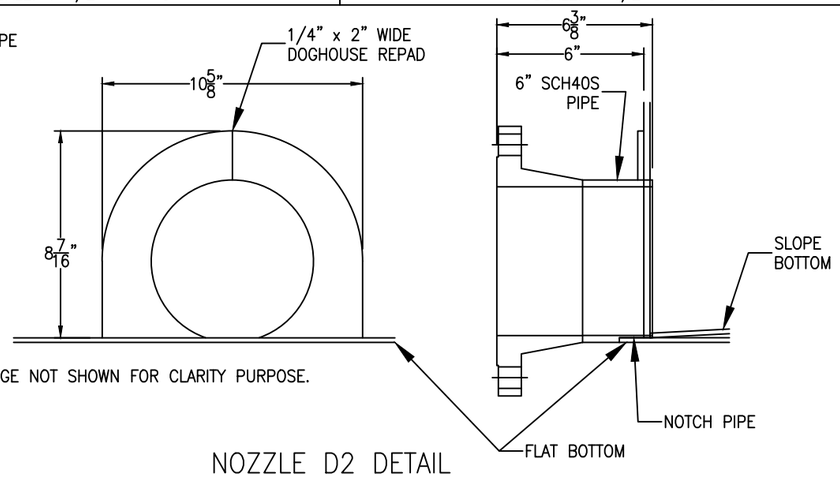

*FLANGE NOT SHOWN FOR CLARITY PURPOSE.

NOZZLE D2 DETAIL

SCALE: 3" = 1'-0"

REV	D.BY	C.BY	DATE	DESCRIPTION
2				AS BUILT
1	RS	NP	6/2/25	CERTIFIED
0	AD	RS	3/27/25	APPROVAL

△1 REVISIONS

Savannah Tank & Equipment Corp.
1517 Telfair Road, Savannah, GA 31415
(912) 233-8902

DRAWN BY: AD
CHK'D BY: RS
APPROVED BY: NP
SCALE: 1/2" = 1'-0"

KIMBERLY CLARK
SECONDARY REFINER FEED TANK
EQUIP. #230-TK-23001
CUST. PO #C000139275

DRAWING NO.: 011-25-3 SHT 3 OF 6 REV. SET 1

FC-14

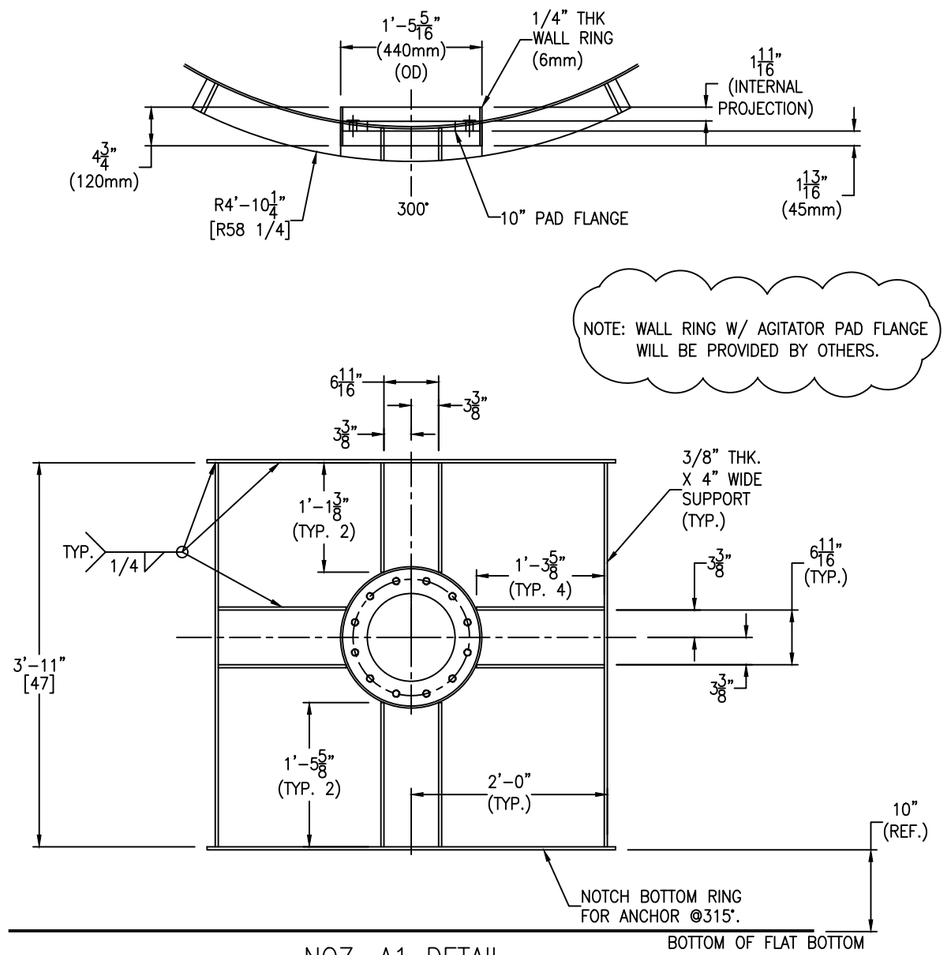

NOZ. A1 DETAIL

SCALE: 1" = 1'-0"

NOTE: WALL RING W/ AGITATOR PAD FLANGE WILL BE PROVIDED BY OTHERS.

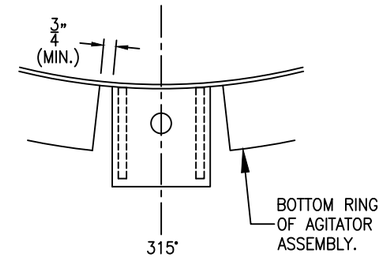

A1 STIFFENER CUTOUT DETAIL

SCALE: 2" = 1'-0"

REV	D.BY	C.BY	DATE	DESCRIPTION
2				AS BUILT
1	RS	NP	6/2/25	CERTIFIED
0	AD	RS	3/27/25	APPROVAL

REVISIONS

Savannah Tank & Equipment Corp.
1517 Telfair Road, Savannah, GA 31415
(912) 233-8902

DRAWN BY: AD
CHK'D BY: RS
APPROVED BY: NP
SCALE: 1/2" = 1'-0"

KIMBERLY CLARK
SECONDARY REFINER FEED TANK
EQUIP. #230-TK-23001
CUST. PO #C000139275

DRAWING NO.: 011-25-4 SHT 4 OF 6 REV. SET 1

FC-14

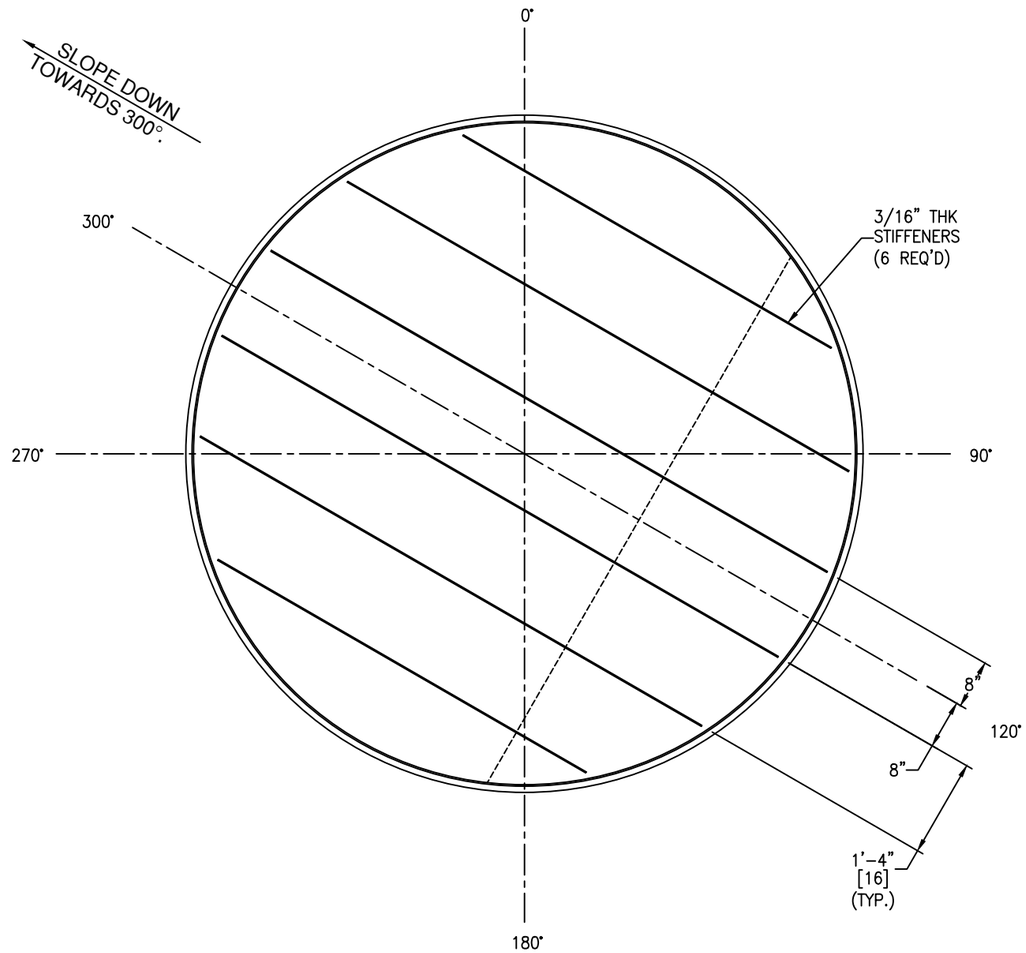

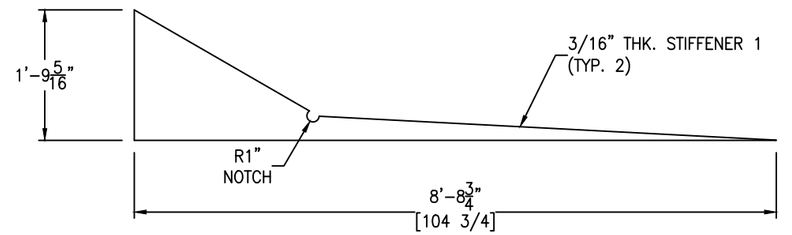

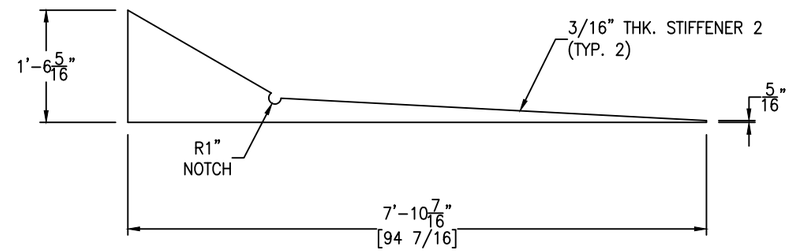

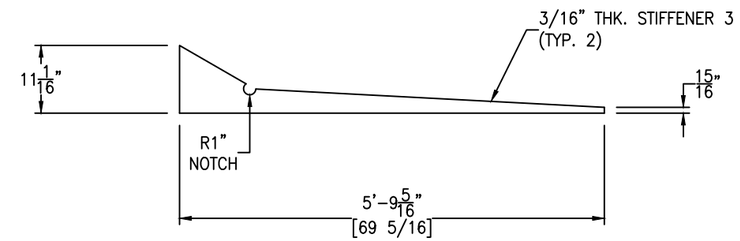

STIFFENERS DETAIL

SCALE: 3/4" = 1'-0"

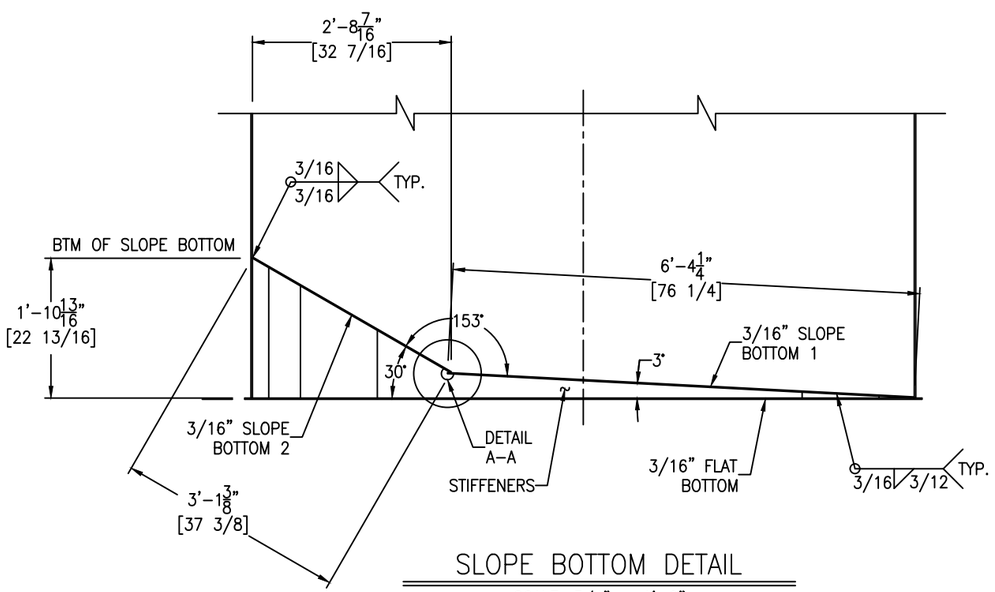

SLOPE BOTTOM DETAIL

SCALE: 3/4" = 1'-0"

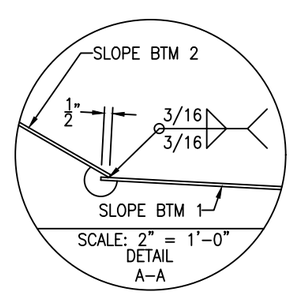

SCALE: 2" = 1'-0"
DETAIL A-A

REV	D.BY	C.BY	DATE	DESCRIPTION
2				AS BUILT
1	RS	NP	6/2/25	CERTIFIED
0	AD	RS	3/27/25	APPROVAL

REVISIONS

Savannah Tank & Equipment Corp.
1517 Telfair Road, Savannah, GA 31415
(912) 233-8902

DRAWN BY: AD
CHK'D BY: RS
APPROVED BY: NP
SCALE: 1/4" = 1'-0"

KIMBERLY CLARK
SECONDARY REFINER FEED TANK
EQUIP. #230-TK-23001
CUST. PO #C000139275

DRAWING NO.: 011-25-5 | SHT 5 OF 6 | REV. SET 1

Bolting for blinds
X1: (12) 7/8-9 NC x 5 1/2" FULL THREADED STUD
(24) 7/8-9 NC HH NUT
(1) 12" 150# RING GASKET X 1/8" THK
(48) BELLEVILLE WASHERS (17-7 STAINLESS STEEL)

Bolting for hinge
(2) 1/2-13 NC x 1 1/2" HH BOLT
(2) 1/2-13 NC HH NUT

FC-14

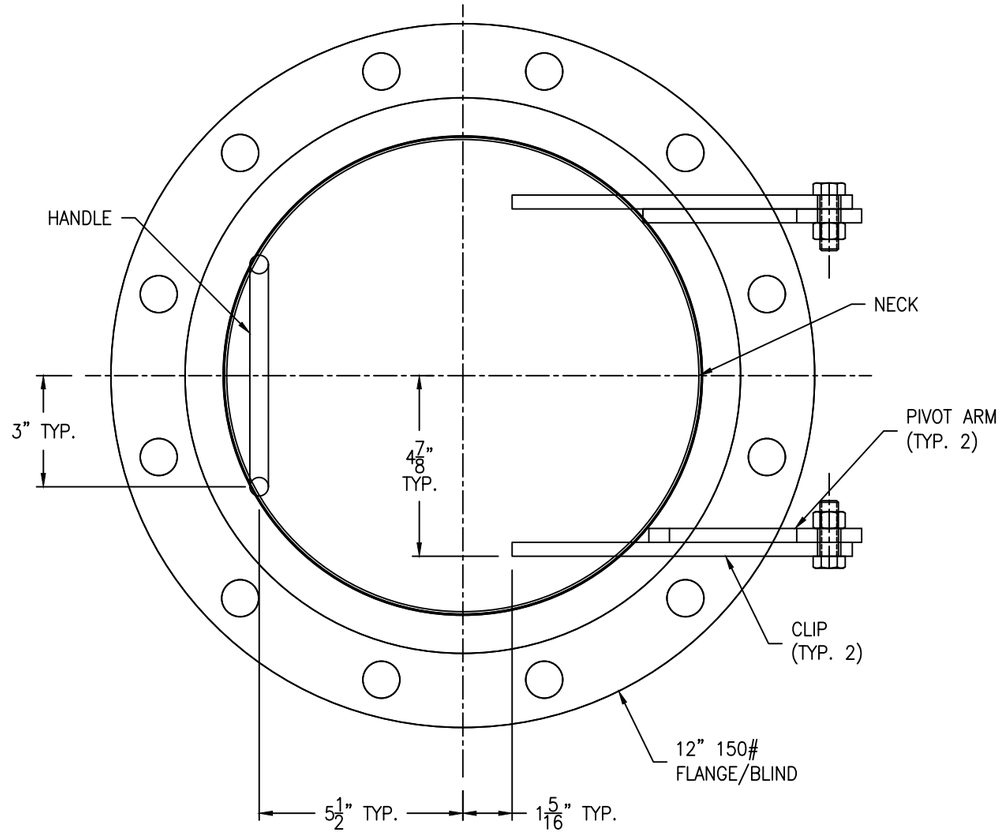

*NOTE: SEE VESSEL ORIENTATION
FOR HINGE LOCATION

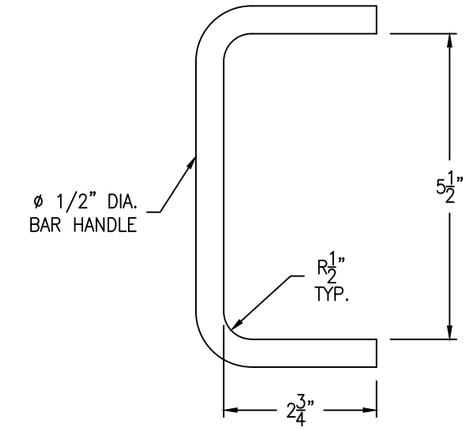

HANDLE DETAIL

(1 REQ'D) SCALE: 6" = 1'-0"

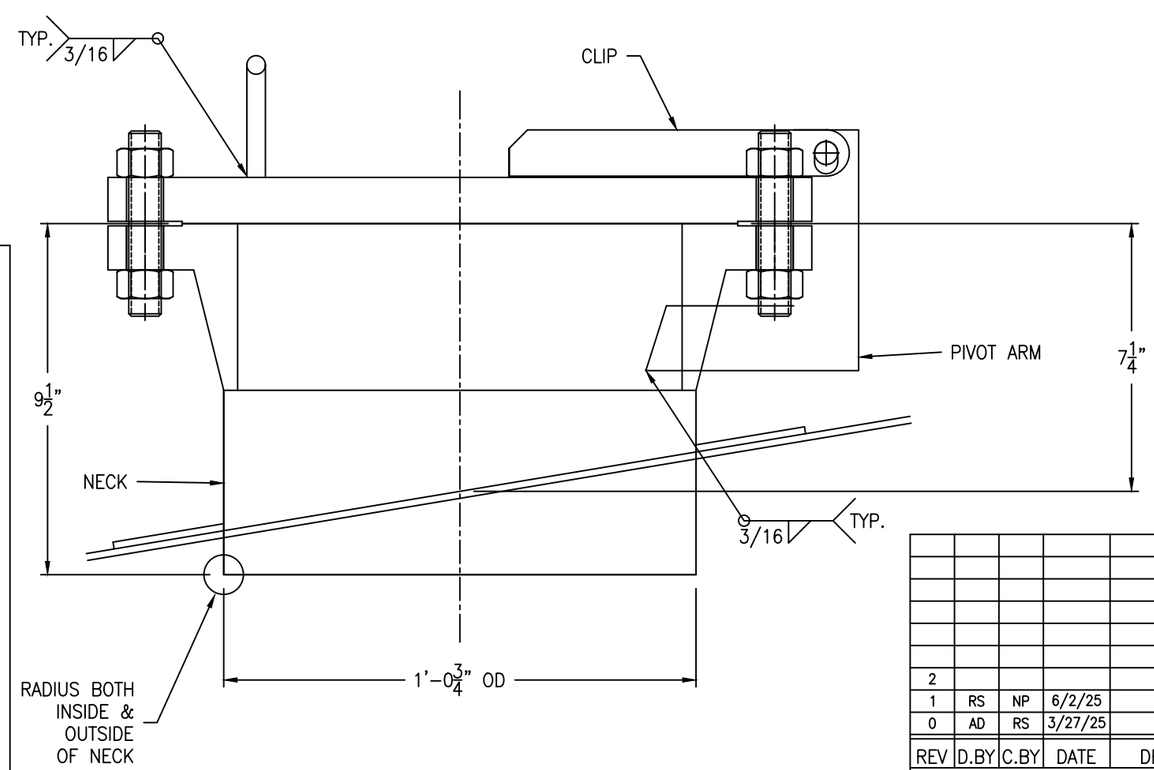

(1 REQ'D) SCALE: 4" = 1'-0"

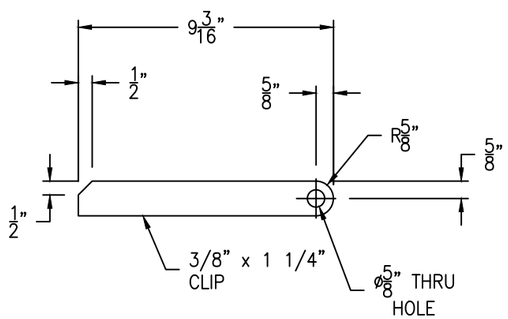

CLIP DETAIL

(2 REQ'D) SCALE: 3" = 1'-0"

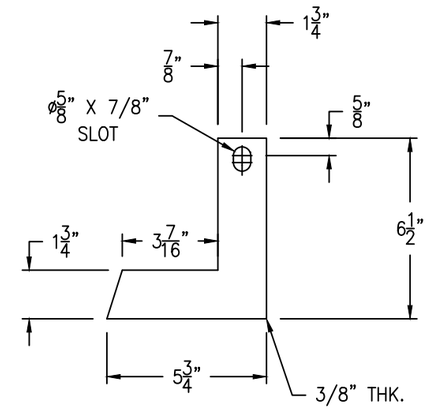

PIVOT ARM DETAIL

(2 REQ'D) SCALE: 3" = 1'-0"

REV	D.BY	C.BY	DATE	DESCRIPTION
2				AS BUILT
1	RS	NP	6/2/25	CERTIFIED
0	AD	RS	3/27/25	APPROVAL

REVISIONS

Savannah Tank & Equipment Corp.
1517 Telfair Road, Savannah, GA 31415
(912) 233-8902

DRAWN BY: AD
CHK'D BY: RS
APPROVED BY: NP
SCALE: 2" = 1'-0"

KIMBERLY CLARK
SECONDARY REFINER FEED TANK
EQUIP. #230-TK-23001
CUST. PO #C000139275

DRAWING NO.: 011-25-6 SHT 6 OF 6 REV. SET 1